Product NO.	EB-400-1046			
ISSUE	DESCRIPTION	DWN	DATE	APPROVEN
R1.0	First issue	Gavin	2020/04/07	JIM.KING

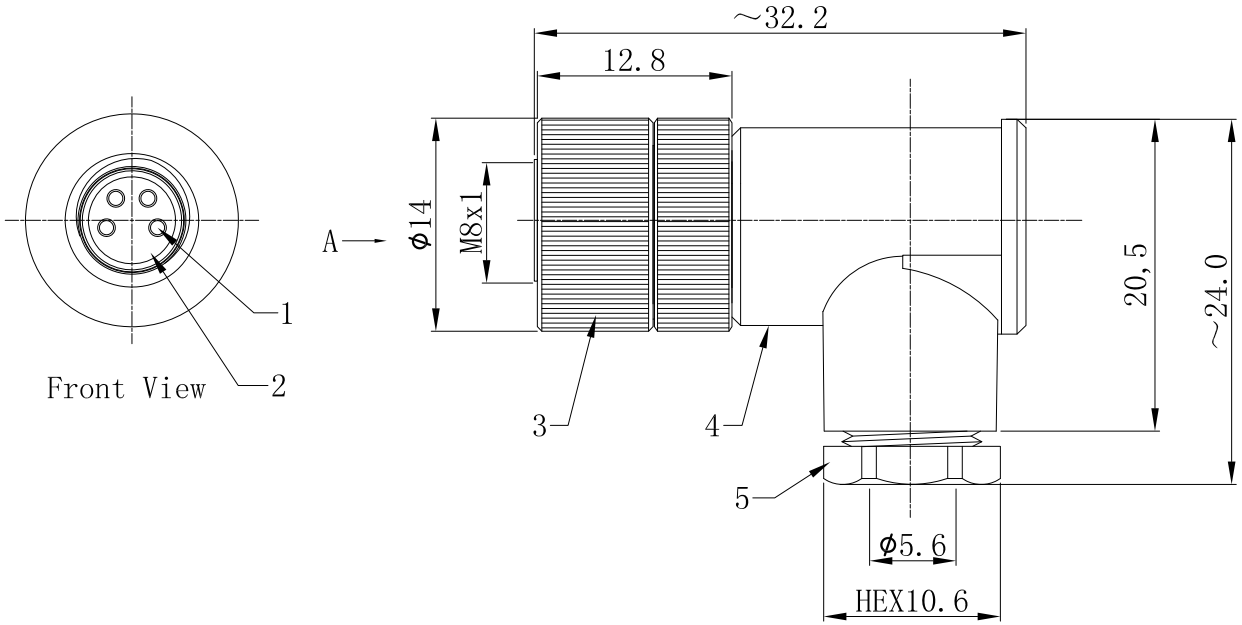

NOTES:

1. Rated voltage/current : 60V/3A
2. Withstanding voltage : 4AC850V/1 Min
3. Wire Range :
   24-22AWG/0.25～0.34mm²
4. Cable Range:3.5～5.0mm
5. Wire connection mode: Screw
6. Operating temperature:-40℃ ～+85℃
7. RoHS Compliance

Pin Assignment Front View

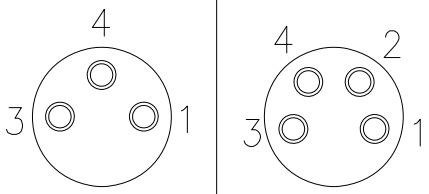

3Pin 4Pin

NO	Description	Material	Finish	Qty
5	Plastic Nut	PA66	Black	1
4	Body	PA66	Black	1
3	Nut M8*1	Brass	Nickel	1
2	Insulator	PA66	Black	1
1	Contacts	Brass	Gold	3-4

-TOLERANCES-
UNLESS OTHERWISE SPECIFIED

UNLESS OTHERWISE SPECIFIED
TOLERANCES FOR MILLIMETERS ARE:
0.5 - 8mm ± 0.20mm
8 - 30mm ± 0.25mm
30 -120mm ± 0.30mm

Buy From Original Factory
www.elecbee.com

NAME: R/A M8 Female Connector					
Appr: JIM.KING	P/N: EB-400-1046				
Check:	Date	Scale	Unit	Type	Page
Draw: Gavin	2020.04.07	Free	MM	Z	1/1